Installation Manual

for

601CL Wireless Intercom System

Installation

1) Before installing fully, test the range of the system. Wire the unit as per wiring diagram, place the equipment in the desired location and test operation.

2) Ensure that the gate base station is installed to facilitate line of sight with the property or reception area. To achieve best results, mount the base as high as possible from the ground. Should you need to extend range, you can mount the base on a small pole to elevate it a few meters from the ground.

Note: Wood and glass only reduce signal strength by 10-20%. Masonry will reduce signal strength by 20-50% per wall. Metal can totally block signals.

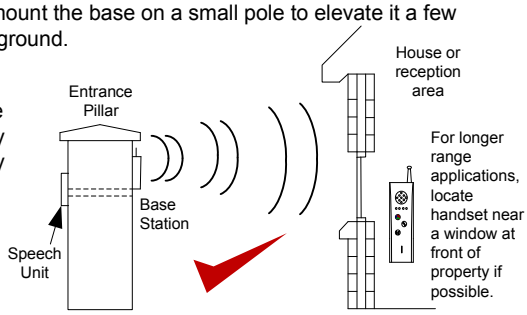

Line of sight for best results!

IMPORTANT – Water WILL damage this equipment

Never drill holes in the rear of the enclosure or top of the enclosure.

ONLY use the cable entry hole provided in the bottom of the gate base station.

ENSURE that the rubber gasket is fitted with the antenna.

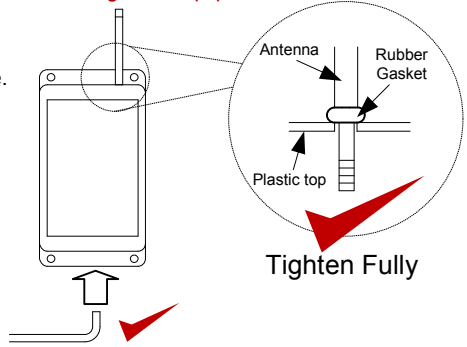

NEVER use chemical based silicone or other sealants as these can corrode electronic components.

NOTE: The base station antenna is telescopic. This is a 5 piece antenna when fully extended. This will need to be fully extended for best results.

Wiring

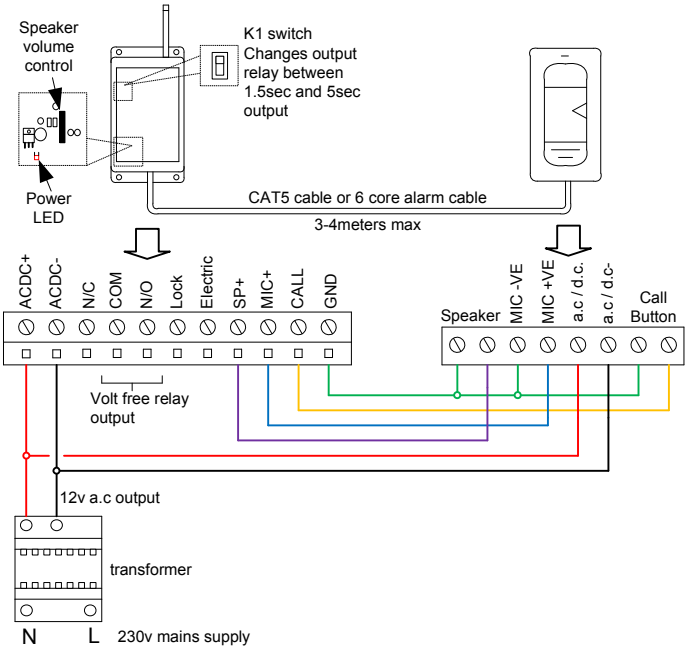

NOTE: Terminals LOCK and Electric, are a 12v a.c. output which can be used to release an electric strike lock.

User Instructions

1) Install the battery in the handset. If the back door does not fit on properly, rotate the battery 90 degrees. If the back door is not properly fitted, the red light on the charging base will not come on and the handset will not charge properly.

2) Charge the handset for a full 12 hours before using, otherwise the battery capacity will be reduced.

3) Once a visitor presses the call button, the handset will beep and the 4 lights will flash. Extend the antenna and press the answer button.

4) You can speak with the visitor and grant access by pressing and holding the door / gate release button for 3 seconds until you hear a bleep.

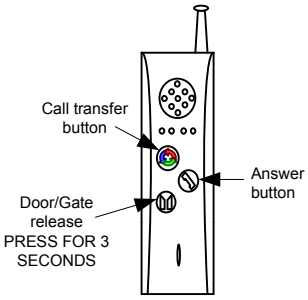

5) Alternatively, you may transfer a call to another handset by pressing the call transfer button.

Handset Coding

When you receive your system, the handset and gate base station should already be coded together. If for some reason they do not communicate, or if you have after your initial purchase, purchased an additional handset, you will need to perform a coding operation for every handset as follows..

1) Press and hold for 3-4 seconds the call transfer button on all handsets.
2) The handsets will each display a solid single light.
3) Momentarily press the call transfer button again to cycle through each of the 4 lights which indicate 4 different channels. Ensure each handset is on a different channel.
4) Press and hold for 3-4 seconds the coding button on the gate base station. This button can be found at the bottom of the base station.
5) Each handset should bleep an acknowledgement tone and after a few seconds they will return to operational mode. Each handset should have a different flashing light.
6) Press the call button on your gate intercom panel and check that all handsets ring and operate as normal.

Troubleshooting

The unit will not work at all

-Check all wiring.
-Perform coding process.
-Check if the system works at close range, and if necessary, relocate.

Low Volume coming from the gate

-Check that speech panel is mounted high enough to capture voice.
-Ensure that cable between speech panel and base does not exceed 3 meters.
-Try changing communication cable between base station and speech panel to a shielded or screened cable. Use the screen as GND.

No or low volume at the speech panel

-Check wiring.
-Adjust speaker volume on base station.